GAM Rack & Pinion



The GAM Helical Rack and Pinion series, along with our broad gearbox offering, provide a complete linear solution. Use our motion control engineering expertise to select the rack and pinion and match it with the right gearbox for your application.

- High precision helical rack for smooth, quiet operation
- Precision pinions easily mount to GAM gearboxes
- Pinion can be pre-mounted to the gearbox
- Racks and pinions are matched to GAM gearboxes for easy selection
- GAM engineering expertise to select the best solution for your application

Whether you need components or a complete package, GAM has the rack and pinion solution for your application.

What is Rack & Pinion?

A linear actuator that converts the rotary motion of the (circular) pinion to linear motion at the (linear) rack.

Why use a Rack & Pinion System?

A rack and pinion system is the most cost-effective way for linear movements greater than 2 meters.

Why use a GAM Rack & Pinion System?

GAM matches the high quality rack and pinion with the best precision gearboxes for your application.

Applications

ISO Quality	Module	Tooth Thickness Tolerance (µm)	Application Examples
6	2.0 - 4.0	-20 ~ 0	• Wood, Plastic, Composite, Aluminium Working Machines • Machine Tools, Water Cutting Machines, Plasma Cutting Machines, Laser Cutting Machines, Tube Bending Systems
10	2.0 - 4.0	-90 ~ 0	• Lifting Axis, Handling, Welding Robots

Robot 7th Axis

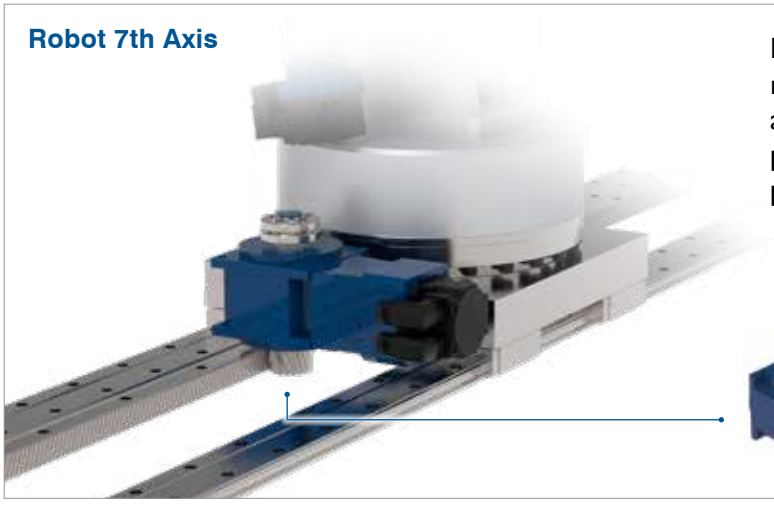

Drive a robot 7th axis with a GAM rack and pinion system. Pinions are designed to optimize the performance of the system when paired with GAM servo gearboxes



Dyna Series + Rack & Pinion
High performance right angle hypoid gearbox with helical pinion and rack

GAM Rack & Pinion Systems

Pair GAM gearboxes with our rack and pinion for a complete linear motion control system.

- Pinions are hardened and work with either ISO 6 or 10 hardened rack
- Optional mounting tool and felt gear (for lubrication) available

Inline Systems



SPH-SP / PHGH-S



SPH-FP / PHGH-W



EPL-AP / PHGH-K



EPL-FP / PHGH-B

Right Angle Systems



DS-FP / PHGH-W



DS-HP / PHGH-D



EPR-AP / PHGH-K



EPR-FP / PHGH-B

Inline Gearbox	Pinion*	Module	Number of Teeth	Maximum Speed ** (m/min)	Feed Force† (kN)
SPH-SP-060	PHGH-20-15-S16-06	2	15	200	3.2
SPH-SP-075	PHGH-20-18-S22-06	2	18	240	4.2
SPH-SP-100	PHGH-20-23-S32-06	2	23	307	6.4
SPH-SP-140	PHGH-30-20-S40-06	3	20	400	10.7
SPH-SP-180	PHGH-40-20-S55-06	4	20	533	24.5
SPH-FP-075	PHGH-20-16-W50-06	2	16	213	4.2
SPH-FP-100	PHGH-20-19-W63-06	2	19	253	6.4
SPH-FP-140	PHGH-30-16-W80-06	3	16	320	14.7
EPL-AP-070	PHGH-20-18-K16-06	2	18	240	1.9
EPL-AP-090	PHGH-20-20-K22-06	2	20	267	2.8
EPL-AP-120	PHGH-20-30-K32-06	2	30	333	4.6
EPL-AP-155	PHGH-30-22-K40-06	3	22	330	12.4
EPL-FP-064	PHGH-20-26-B31.5-06	2	26	347	1.2
EPL-FP-090	PHGH-20-33-B50-06	2	33	440	2.7
EPL-FP-110	PHGH-20-40-B63-06	2	40	444	4.5
EPL-FP-140	PHGH-30-16-W80-06	3	16	240	10.5

Right Angle Gearbox	Pinion*	Module	Number of Teeth	Maximum Speed ** (m/min)	Feed Force† (kN)
DS-FP-055	PHGH-20-16-W50-06	2	16	284	2.9
DS-FP-075	PHGH-20-16-W50-06	2	16	284	5.8
DS-FP-090	PHGH-20-19-W63-06	2	19	296	9.6
DS-FP-115	PHGH-30-16-W80-06	3	16	320	13.3
DS-FP-140	PHGH-30-19-W80-06	3	19	317	18
DS-FP-190	PHGH-40-20-W125-06	4	20	400	30.1
DS-HP-055	PHGH-20-15-D20-06	2	15	267	3.1
DS-HP-075	PHGH-20-18-D25-06	2	18	320	5.2
DS-HP-090	PHGH-20-23-D30-06	2	23	358	8.1
DS-HP-115	PHGH-30-20-D40-06	3	20	400	11.6
DS-HP-140	PHGH-40-20-D55-06	4	20	444	20
DS-HP-190	PHGH-40-20-D70-06	4	20	400	30.1
EPR-AP-070	PHGH-20-18-K16-06	2	18	240	1.8
EPR-AP-090	PHGH-20-20-K22-06	2	20	267	2.7
EPR-AP-120	PHGH-20-30-K32-06	2	30	333	4.6
EPR-AP-155††	PHGH-30-22-K40-06	3	22	330	12.4
EPR-FP-064	PHGH-20-26-B31.5-06	2	26	347	1.2
EPR-FP-090	PHGH-20-33-B50-06	2	33	440	2.4
EPR-FP-110	PHGH-20-40-B63-06	2	40	444	4
EPR-FP-140††	PHGH-30-16-W80-06	3	16	240	10.5

* See pages 184-188 for pinion information
** 3:1 ratio with maximum input speed
† At 1 m/s, may vary based on speed and ratio
†† Contact GAM for availability

GHGH Series Helical Rack (Quality Q6)

Type Code

Rack Series		Module		Length		Precision Grade
GHGH	-	**20**	-	**10**	-	**06**
Helical Teeth Right Hand Helix Ground Induction Hardened		20 = Mod 2 30 = Mod 3 40 = Mod 4		10 = 1 m (standard)		ISO 6

Part Numbers

Module	2.0	3.0	4.0
Type Code	GHGH-20-10-06	GHGH-30-10-06	GHGH-40-10-06
Part Number	84020003	84020004	84020001

Specifications

Quality	ISO Q6	Hardness	50 - 55 HRC
Helix Angle	Right Hand 19° 31′ 42″	Teeth Finish	Ground
Pressure Angle	20°	Side/End Finish	Ground
Material	1045	Heat Treatment	Induction Hardened

Tolerance

Module	2.0	3.0	4.0
Tooth Thickness Tolerance (µm)	-20	-10	-20
Single Pitch Error (µm)	≤8	≤9	≤10
Total Pitch Error (µm)	≤36	≤36	≤36

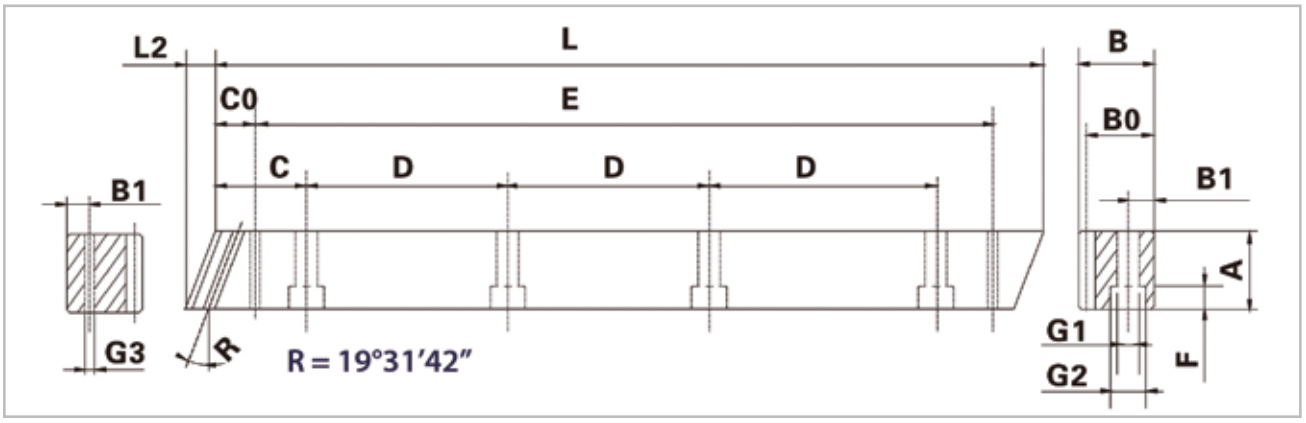

Dimensions (mm)

Type Code	Module	No. of Teeth	L	L2	A	B	B0	C	D	No of Holes	B1	G1	G2	F	C0	E	G3	Weight (kg)
GHGH-20-10-06	2	150	1000	8.50	24	24	22	62.50	125	8	8	7	11	7	31.7	936.60	5.7	4.1
GHGH-30-10-06	3	100	1000	10.30	29	29	26	62.50	125	8	9	10	15	9	35	930.00	7.7	6.0
GHGH-40-10-06	4	75	1000	13.80	39	39	35	62.50	125	8	12	10	15	9	33.3	933.40	7.7	10.8

GHFH Series Helical Rack (Quality Q10)

Type Code

Rack Series		Module		Length		Precision Grade
GHFH	-	**20**	-	**10**	-	**10**
Helical Teeth Right Hand Helix Finish Milled Induction Hardened		15 = Mod 1.5 20 = Mod 2 30 = Mod 3 40 = Mod 4		10 = 1 m (standard)		ISO 10

Part Numbers

Module	1.5	2.0	3.0	4.0
Type Code	GHFH-15-10-10	GHFH-20-10-10	GHFH-30-10-10	GHFH-40-10-10
Part Number	84020012	84020005	84020006	84020007

Specifications

Quality	ISO Q10	Hardness	50 - 55 HRC
Helix Angle	Right Hand 19° 31′ 42″	Teeth Finish	Finish Milled
Pressure Angle	20°	Side/End Finish	Finish Milled
Material	1045	Heat Treatment	Induction Hardened

Tolerance

Module	1.5	2.0	3.0	4.0
Tooth Thickness Tolerance (µm)	-124	-124	-124	-124
Single Pitch Error (µm)	≤37	≤37	≤39	≤43
Total Pitch Error (µm)	≤148	≤148	≤162	≤175

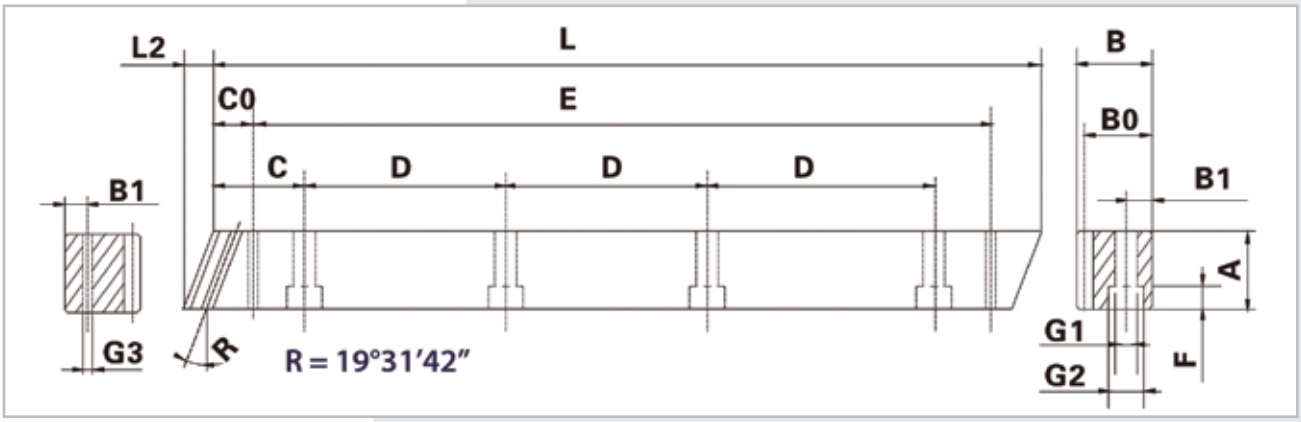

Dimensions (mm)

Type Code	Module	No. of Teeth	L	L2	A	B	B0	C	D	No of Holes	B1	G1	G2	F	C0	E	G3	Weight (kg)
GHFH-15-10-10	1.5	200	1000	6.00	17	17	15.5	62.50	125	8	8	6	9.5	7	31.7	936.60	5.7	2.6
GHFH-20-10-10	2	150	1000	8.50	24	24	22	62.50	125	8	8	7	11	7	31.7	936.60	5.7	4.1
GHFH-30-10-10	3	100	1000	10.30	29	29	26	62.50	125	8	9	10	15	9	35.0	930.00	7.7	6.0
GHFH-40-10-10	4	75	1000	13.80	39	39	35	62.50	125	8	12	10	15	9	33.3	933.40	7.7	10.8

Rack Installation

These are the three main steps to installing GAM rack. See the GAM Rack Installation Instructions for more detailed installation information. Installation of multiple rack pieces end-to-end requires an opposite tooth installation gauge:

Helical Tooth Installation Gauge

Module	1.5	2.0	3.0	4.0
Type Code	GHGH-15-02-Gauge	GHGH-20-02-Gauge	GHGH-30-02-Gauge	GHGH-40-02-Gauge
Part Number	84030012	84030005	84030004	84030003
Dimensions HxWxL (mm)	17 x 17 x 200	24 x 24 x 200	29 x 29 x 200	39 x 39 x 200

Step 1

Put the racks on the base, end to end, without the screw

NOTE: *Ensure the installation mounting surface is clean and clear of debris and within tolerance (perpendicularity and flatness ≤ 0.02 mm)*

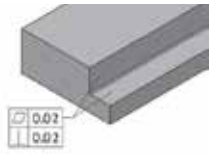

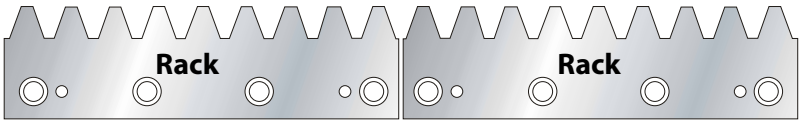

Step 2

Put the Rack Gauge across the ends of the joined racks and adjust the pitch. The ends of the racks each form half a tooth.

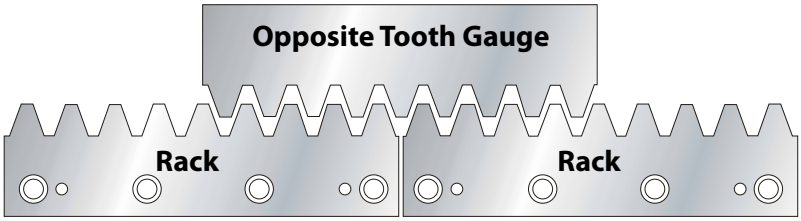

Step 3

Bolt the racks to the base in sequence. Install dowel pins.

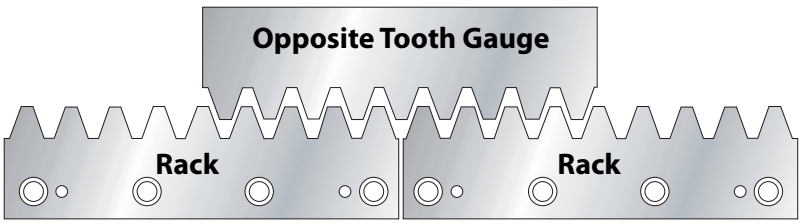

Rack & Pinion Alignment

For best performance, the rack and pinion must be installed with proper tooth engagement. To check this, we recommend using a red gear-marking compound to check the gear mesh contact pattern ***under load conditions***.

Correct

Red compound distributed evenly indicates contact is even across the face of the tooth

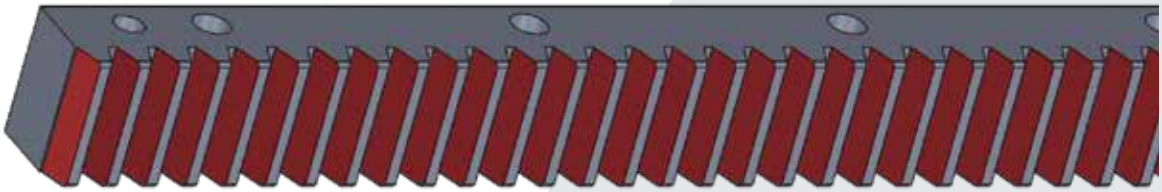

Not Parallel

Red compound forming a triangular shape across the face of the tooth indicates the pinion and rack are not parallel. Adjust the pinion so the face of the pinion and the side of the rack are parallel. The axis of the pinion should be perpendicular to the rack

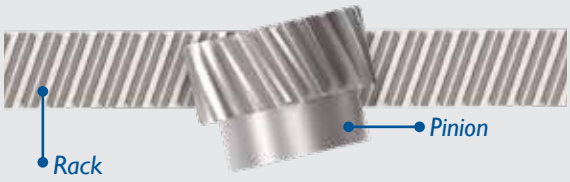

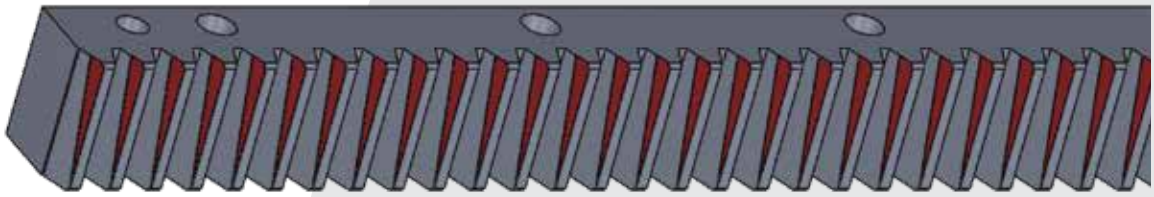

Incorrect Mounting Distance

Red compound appearing only on the top half across the face of the tooth indicates insufficient tooth contact between the rack and pinion. Adjust the center distance between the rack and the pinion. The pinion specification tables include the center distance for each size pinion.

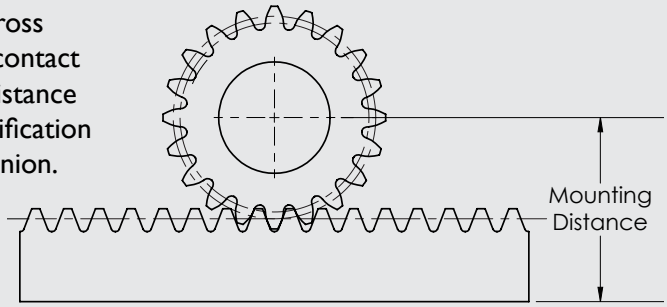

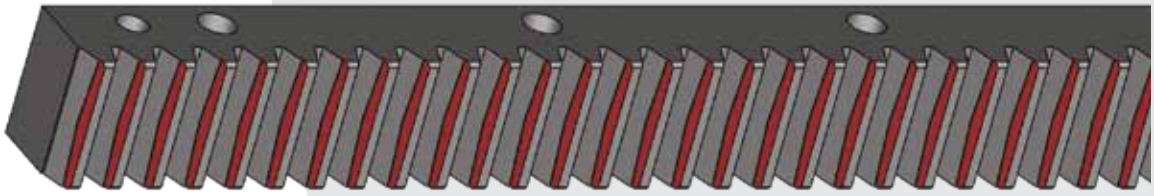

PHGH-S Pinion (Spline)



GAM Spline Pinions connect to the output shaft of the gearbox with a spline connection.

Pinion Series		Module (M)		Number of Teeth (z)		Pinion Type	Spline Diameter		Quality
PHGH	-	**20**	-	**18**	-	**S**	**22**	-	**06**
4140 Steel Helical Teeth Left Hand Helix Ground Induction Hardened		20 = Mod 2 30 = Mod 3 40 = Mod 4				Spline	See Table		ISO 6

Specifications

Type Code	Part Number	Module (M)	No. of Teeth (z)	Spline Diameter (DIN 5480)	Travel per Rotation (mm)	Max Feed Force (kN)	Mounting Distance (mm)	Use with GAM Gearbox
PHGH-20-15-S16-06	84010014	2	15	N16x0.8x18x7H	100.00	11.1	39.10	SPH-SP-060
PHGH-20-18-S22-06	84010015	2	18	N22x1.25x16x7H	120.00	11.9	42.10	SPH-SP-075
PHGH-20-23-S32-06	84010016	2	23	N32x1.25x24x7H	153.33	12.9	47.40	SPH-SP-100
PHGH-30-20-S40-06	84010017	3	20	N40x2x18x7H	200.00	22.2	59.20	SPH-SP-140
PHGH-40-20-S55-06	84010018	4	20	N55x2x26x7H	266.67	39.1	79.04	SPH-SP-180

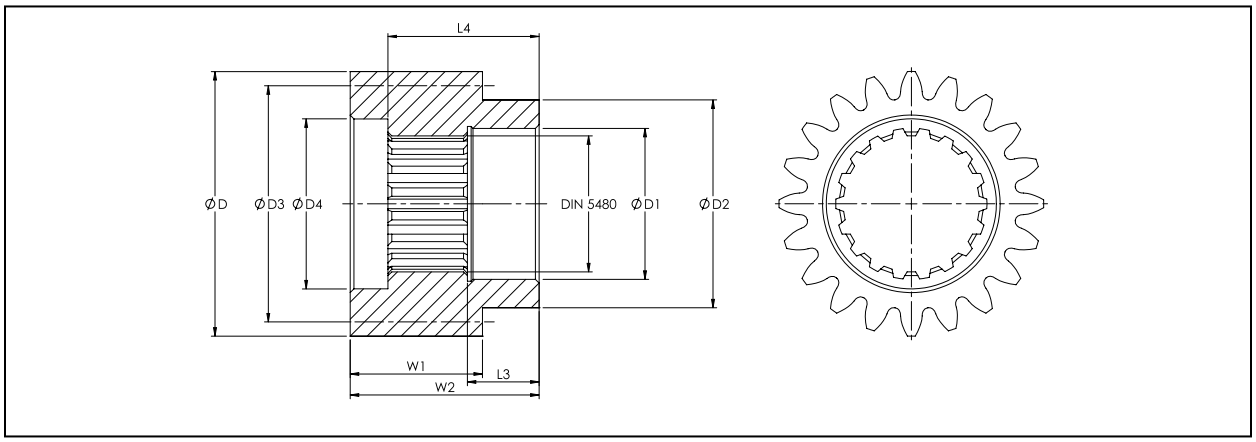

Dimensions

Type Code	Spline Dia DIN 5480	D (mm)	D1 (mm) F7	D2 (mm)	D3 Pitch (mm)	Dw Working Pitch (mm)	D4 (mm)	W1 (mm)	W2 (mm)	L3 (mm)	L4 (mm)	x Shift Coefficient
PHGH-20-15-S16-06	N16x0.8x18x7H	38.2	16	25	31.831	34.200	20	26	32	11	26.5	0.59
PHGH-20-18-S22-06	N22x1.25x16x7H	44.2	22	30	38.197	40.200	25	26	33	12	27.5	0.50
PHGH-20-23-S32-06	N32x1.25x24x7H	54.8	32	40	48.808	50.800	35	26	34	13	27	0.50
PHGH-30-20-S40-06	N40x2x18x7H	72.4	40	55	63.662	66.400	45	31	51	20	41	0.46
PHGH-40-20-S55-06	N55x2x26x7H	96.08	55	75	84.883	88.080	60	41	54	20	44	0.40

PHGH-K Pinion (Keyed Shaft)



GAM Keyed Pinions connect to the output shaft of the gearbox with a key

Pinion Series		Module		Number of Teeth		Pinion Type	Shaft Diameter		Quality
PHGH	-	**20**	-	**18**	-	**K**	**16**	-	**06**
4140 Steel Helical Teeth Left Hand Helix Ground Induction Hardened		15 = Mod 1.5 20 = Mod 2 30 = Mod 3 40 = Mod 4				Keyed Shaft	Diameter (mm)		ISO 6

Specifications

Type Code	Part Number	Module (M)	No. of Teeth (z)	D1 Shaft Diameter (mm) [in.]	Travel per Rotation (mm)	Max Feed Force (kN)	Mounting Distance (mm)	Use with GAM Gearbox
PHGH-15-20-K0.375-06	84010001	1.5	20	9.53 [0.375]	100	1.3	31.4	PE-N-023
PHGH-20-18-K0.500-06	84010002	2	18	12.7 [0.500]	120	2.8	41.10	PE-N-034
PHGH-20-18-K16-06	84010010	2	18	16	120.00	12.88	41.10	EPL-A-070 / EPR-A-070
PHGH-20-20-K22-06	84010011	2	20	22	133.33	13.37	43.22	EPL-A-090 / EPR-A-090
PHGH-20-30-K32-06	84010012	2	30	32	200.00	15.02	53.83	EPL-A-120 / EPR-A-120
PHGH-30-22-K40-06	84010013	3	22	40	220.00	20.05	61.01	EPL-A-155 / EPR-A-155

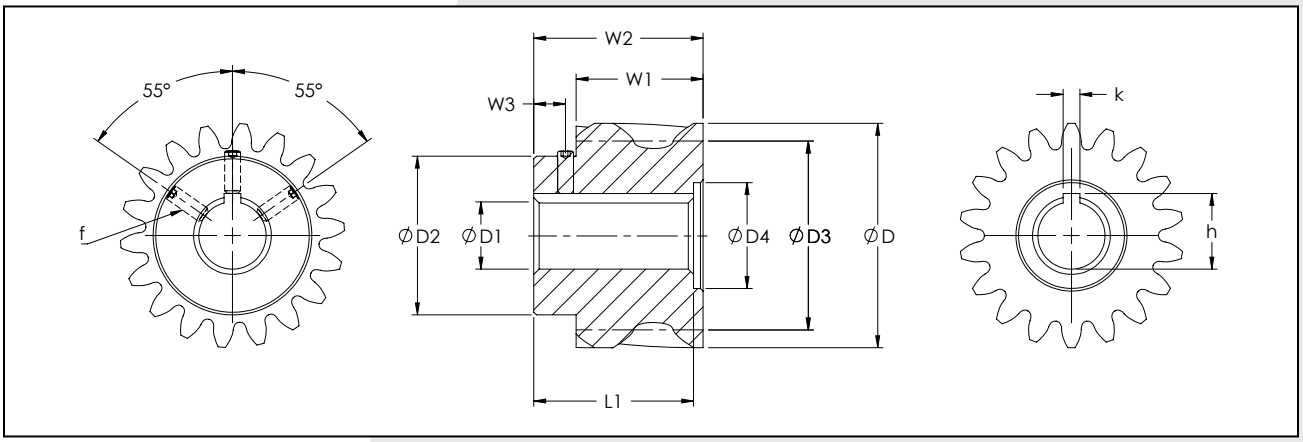

Dimensions

Type Code	D (mm)	D1 (mm) [in]	D2 (mm)	D3 Pitch (mm)	D4 (mm)	W1 (mm)	W2 (mm)	W3 (mm)	L1 (mm)	f (mm)	k (mm)	h (mm)
PHGH-15-20-K0.375-06	34.83	9.53 H6 [$0.375^{+0.0004}_{0}$]	25	31.83	18	19	27.5	6.5	24.5	(3) M3 x 0.5 SHSS 8 mm Long	-	-
PHGH-20-18-K0.500-06	42.4	12.7 H6 [$0.500^{+0.0004}_{0}$]	30	38.20	20	24	32	6	30.2	(3) M3 x 0.5 SHSS 8 mm Long	3.175	14.3
PHGH-20-18-K16-06	42.4	16 F7	25	38.20	25	28	34.5	-	29	-	5	18.3
PHGH-20-20-K22-06	46.4	22 F7	36	42.44	30	28	42.5	-	37	-	6	24.8
PHGH-20-30-K32-06	67.7	32 F7	55	63.66	45	28	66	-	59	-	10	35.3
PHGH-30-22-K40-06	76	40 F7	62	70.03	50	28	93	-	83	-	12	43.3

PHGH-W Pinion (Welded Flange)



GAM Welded Flange Pinions mount to flange-output gearboxes.

Pinion Series		Module (M)		Number of Teeth (z)		Pinion Type	Flange Bolt Circle		Quality
PHGH	-	**20**	-	**16**	-	**W**	**50**	-	**06**
4140 Steel Helical Teeth Left Hand Helix Ground Induction Hardened		20 = Mod 2 30 = Mod 3 40 = Mod 4		Per Table		Welded Flange	Diameter (mm)		ISO 6

Specifications

Type Code	Part Number	Module (M)	No. of Teeth (z)	D5 Bolt Circle ISO 9409 Flange (mm)	Travel per Rotation (mm)	Max Feed Force (kN)	Mounting Distance (mm)	Fig	Use with GAM Gearbox
PHGH-20-16-W50-06	84010022	2	16	50	106.67	14.8	38.98	1	SPH-F-075 / DS-F-055 / DS-F-075
PHGH-20-19-W63-06	84010023	2	19	63	126.67	15.7	42.16	2	SPH-F-100 / DS-F-090
PHGH-30-16-W80-06	84010024	3	16	80	160.00	27.7	51.46	3	SPH-F-140 / EPL-F-140 / DS-F-115
PHGH-30-19-W80-06	84010025	3	19	80	190.00	29.5	56.24	3	DS-F-140
PHGH-40-20-W125-06	84010026	4	20	125	266.67	55.5	77.44	3	DS-F-190

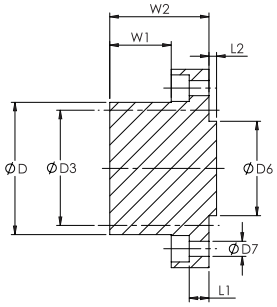

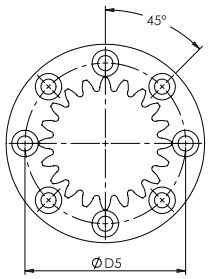

Fig 1

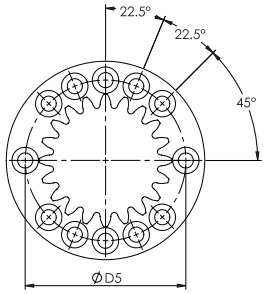

Fig 2

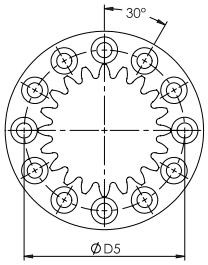

Fig 3

Dimensions

Type Code	Figure	D (mm)	D3 (mm)	D5 Bolt Circle (mm)	D6 (mm) k6	D7 (mm)	W1 (mm)	W2 (mm)	L1 (mm)	L2 (mm)
PHGH-20-16-W050-06	1	37.95	33.953	50	31.5	6.6	26	41	8.5	5
PHGH-20-19-W063-06	2	44.30	40.319	63	40	6.6	26	41	8.5	5
PHGH-30-16-W080-06	3	56.90	50.930	80	50	9	32.5	52.5	12	5
PHGH-30-19-W080-06	3	66.50	60.479	80	50	9	32.5	52.5	12	5
PHGH-40-10-W125-06	3	92.90	84.883	125	80	11	45	70	15	6

PHGH-B Pinion (Bolt-Through)



GAM Bolt-Through Pinions mount to flange-output gearboxes.

Pinion Series		Module		Number of Teeth		Pinion Type	Bolt Circle		Quality
PHGH	-	**20**	-	**26**	-	**B**	**31.5**	-	**06**
4140 Steel Helical Teeth Left Hand Helix Ground Induction Hardened		20 = Mod 2				Bolt-Through	Diameter (mm)		ISO 6

Specifications

Type Code	Part Number	Module (M)	No. of Teeth (z)	D5 Bolt Circle (ISO 9409 Flange) (mm)	Travel per Rotation (mm)	Max Feed Force (kN)	Mounting Distance (mm)	Fig	Use with GAM Gearbox
PHGH-20-26-B31.5-06	84010019	2	26	31.5	173.334	13.4	50.40	1	EPL-F-064 / EPR-F-064 DS-F-055
PHGH-20-33-B50-06	84010020	2	33	50	220.000	18.4	57.80	1	EPL-F-090 / EPR-F-090
PHGH-20-40-B63-06	84010021	2	40	63	266.667	14.8	65.20	2	EPL-F-110 / EPR-F-110

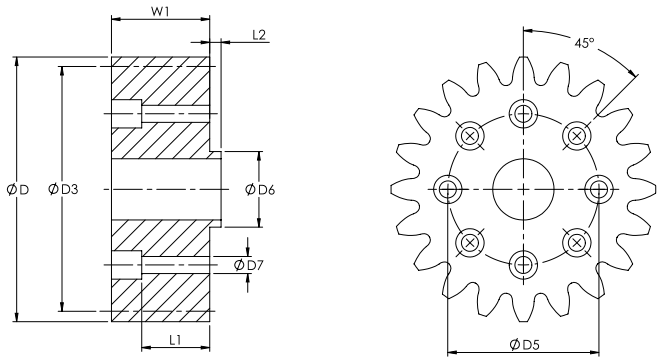

Fig. 1 Fig. 2

Dimensions

Type Code	Figure	D (mm)	D3 Pitch Dia (mm)	Dw Working Pitch (mm)	D5 Bolt Circle (mm)	D6 (mm)	D7 (mm)	W1 (mm)	L1 (mm)	L2 (mm)	x Shift Coefficient
PHGH-20-26-B31.5-06	1	60.80	55.174	56.800	31.5	20	5.5	26	14	3	0.4065
PHGH-20-33-B050-06	1	75.60	70.028	71.599	50	31.5	6.6	26	12	3	0.3928
PHGH-20-40-B063-06	2	90.40	84.883	86.400	63	40	6.6	26	12	3	0.3792

PHGH-D Pinion (Shaft)



GAM Shaft Pinions mount to hollow output shaft gearboxes

Pinion Series		Module (M)		Number of Teeth (z)		Pinion Type	Shaft Diameter		Quality
PHGH	**-**	**20**	**-**	**18**	**-**	**D**	**25**	**-**	**06**
4140 Steel Helical Teeth Left Hand Helix Ground Induction Hardened		20 = Mod 2 30 = Mod 3 40 = Mod 4				Shaft	Diameter (mm)		ISO 6

Specifications

Type Code	Part Number	Module (M)	No. of Teeth (z)	D1 Shaft Diameter (mm)	Travel per Rotation (mm)	Max Feed Force (kN)	Mounting Distance (mm)	Use with GAM Gearbox
PHGH-20-15-D20-06	84010027	2	15	20	100.00	11.1	39.10	DS-H-055
PHGH-20-18-D25-06	84010028	2	18	25	120.00	11.9	42.10	DS-H-075
PHGH-20-23-D30-06	84010029	2	23	30	153.33	12.9	47.40	DS-H-090
PHGH-30-20-D40-06	84010030	3	20	40	200.00	22.2	59.20	DS-H-115
PHGH-40-20-D55-06	84010031	4	20	55	266.67	39.1	79.04	DS-H-140
PHGH-40-20-D70-06	84010032	4	20	70	266.67	39.1	79.04	DS-H-190

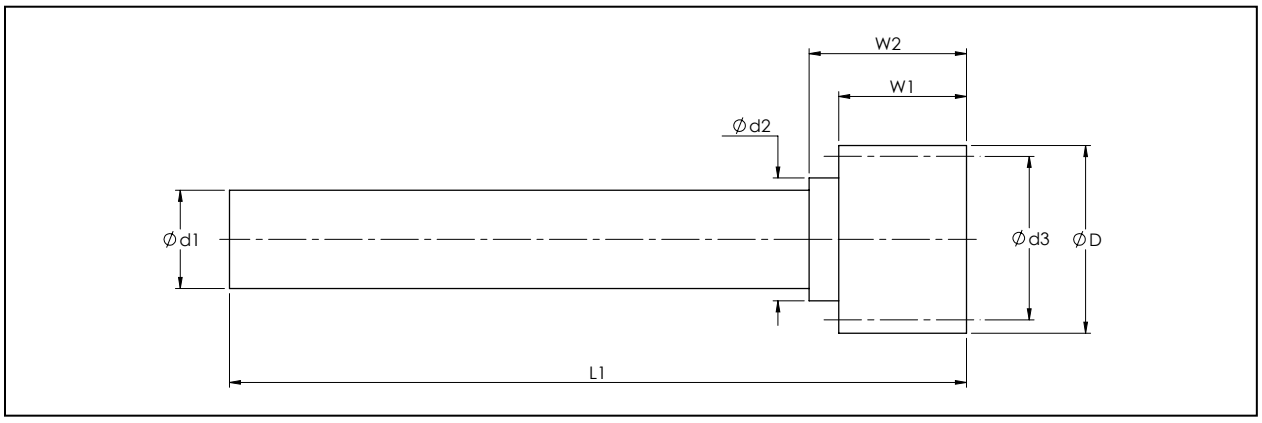

Dimensions

Type Code	D (mm)	D1 (mm) F7	D2 (mm)	D3 Pitch (mm)	Dw Working Pitch (mm)	W1 (mm)	W2 (mm)	L1 (mm)	x Shift Coefficient
PHGH-20-15-D20-06	38.2	20	25	31.83	34.20	26	32	150	0.59
PHGH-20-18-D25-06	44.2	25	30	38.20	40.20	26	33	164	0.50
PHGH-20-23-D30-06	54.8	30	40	48.81	50.80	26	34	189	0.50
PHGH-30-20-D40-06	72.4	40	55	63.66	66.40	31	51	230	0.46
PHGH-40-20-D55-06	96.08	55	75	84.88	88.08	41	54	268	0.40
PHGH-40-20-D70-06	96.08	70	75	84.88	88.08	41	54	325	0.40

Rack Installation Gauge

These opposite tooth gauges assist with installing rack pieces end-to-end. Select the gauge that matches the module of your rack.



Helical Tooth Installation Gauge

Module	1.5	2.0	3.0	4.0
Type Code	GHGH-15-02-Gauge	GHGH-20-02-Gauge	GHGH-30-02-Gauge	GHGH-40-02-Gauge
Part Number	84030012	84030005	84030004	84030003
Helix	Left Hand	Left Hand	Left Hand	Left Hand
Dimensions HxWxL (mm)	17 x 17 x 200	24 x 24 x 200	29 x 29 x 200	39 x 39 x 200

Felt Pinions

Use a felt pinion with your lubrication system to lubricate the rack and pinion. Felt pinions can be mounted to lubricate either the rack or the pinion.



Felt Pinions

Module	2.0		3.0		4.0	
Type Code	PHFP-20-L	PHFP-20-R	PHFP-30-L	PHFP-30-R	PHFP-40-L	PHFP-40-R
Part Number	84030006	84030007	84030008	84030009	84030010	84030011
Helix	Left Hand	Right Hand	Left Hand	Right Hand	Left Hand	Right Hand
Mounts to	Rack	Pinion	Rack	Pinion	Rack	Pinion

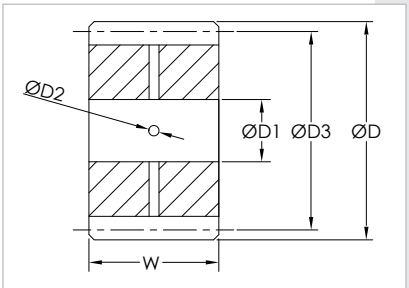

Module	Number of Teeth (z)	D (mm)	D1 (mm)	D2 (mm)	D3 Pitch (mm)	W (mm)
2	18	42	12	2	38.2	25
3	18	63	12	3	57.3	30
4	18	84	12	4	76.4	40

GAM Lubrication System

For best performance, the rack and pinion must be kept lubricated. GAM makes this easy with a complete Lubrication System including everything from an easy-to-use automatic lubricator pump to a felt pinion to apply grease directly to the pinion or rack.

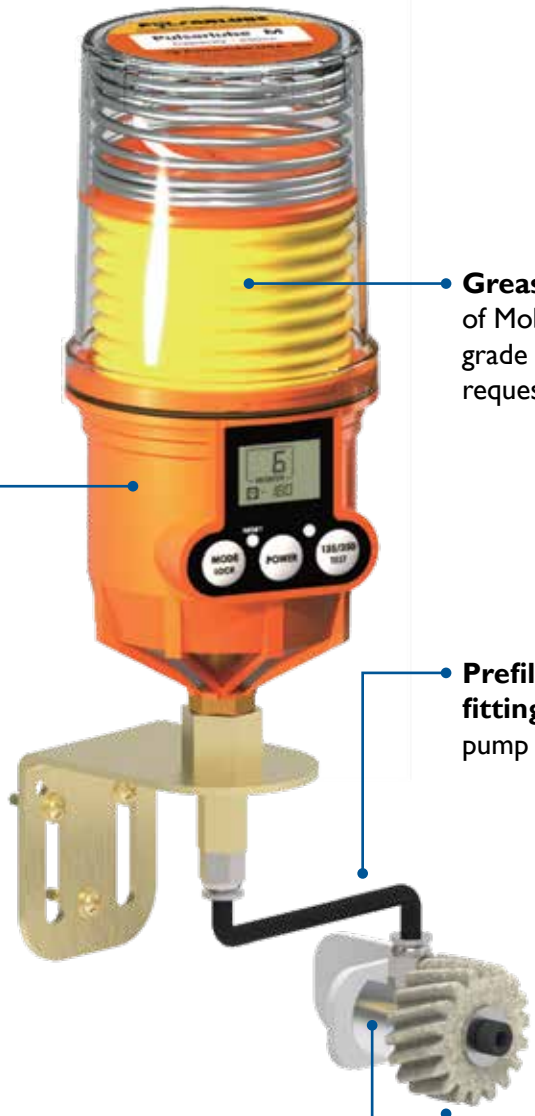

Grease Pack with 125 ml of Mobilux EP2 grease (food grade grease available on request)

PulsarLube Automatic Single Point Lubricator provides the proper amount of fresh lubricant at the right time, avoiding over- or under-lubricating. Includes mounting bracket and hardware

Prefilled tubing and all fittings to connect the pump to the pinion shaft

Pinion Shaft delivers grease at multiple points to the felt pinion while allowing the pinion to rotate.

Optional custom mounting bracket available upon request

Felt Pinion with either a left-hand helix to lubricate the rack or right-hand helix to lubricate the pinion

Lubrication System used on rack of Robot 7th axis

Felt Pinion used to lubricate rack

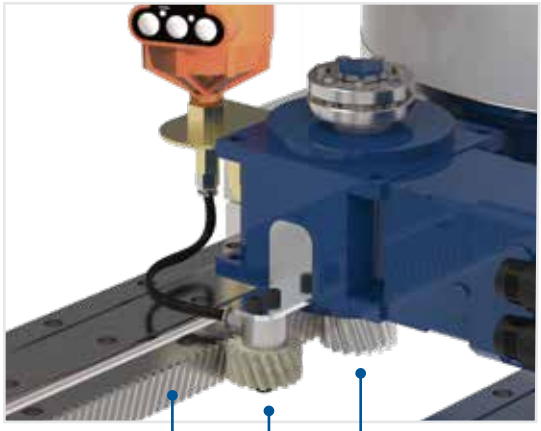

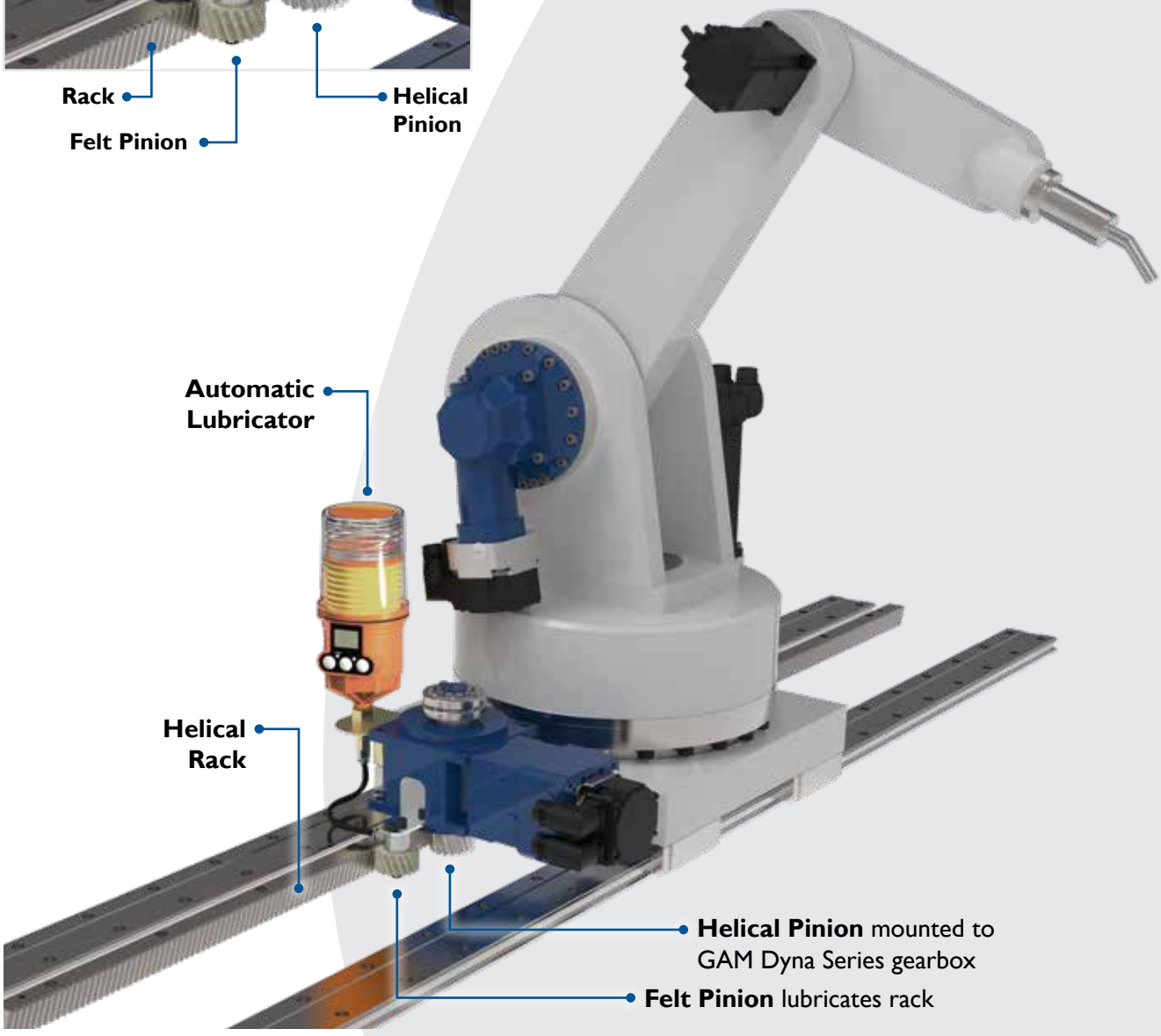

Lubrication System Ordering Information

Order (1) Lubricator* and (1) Felt Pinion according to the module size of the rack and pinion system and whether the felt pinion will be lubricating the rack or the pinion.

Rack/Pinion Module	Lubricator* Part Number	Felt Pinion (Select 1)	
		Left Hand Helix (Lubricates Rack)	Right Hand Helix (Lubricates Pinion)
1.5		Contact GAM	
2.0	84050002	74030004	74030005
3.0	84050003	74030006	74030007
4.0	84050004	74030008	74030009

* Lubricator includes lubricator pump, all fittings, prefilled tubing, shaft for felt pinion, and a 125 ml EP2 grease pack

Dimensions (all dimension in mm)

Felt Pinion & Shaft

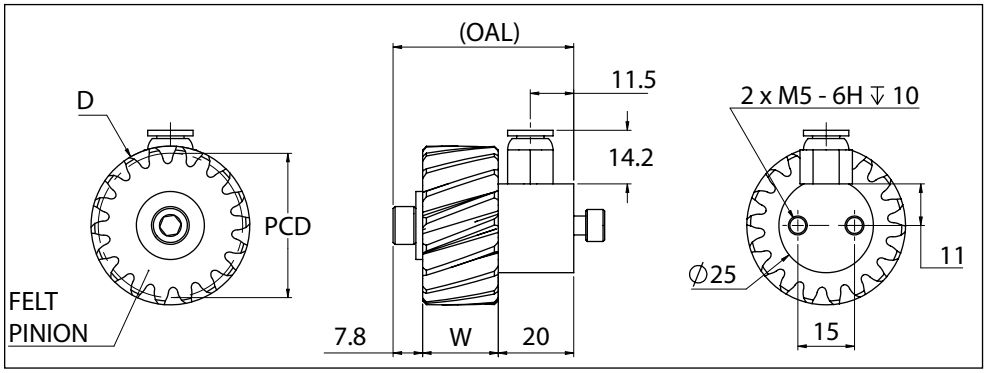

Module	D Pinion Diameter (mm)	W Pinion Length (mm)	OAL Overall Length (mm)	PCD Pitch Circle Diameter (mm)
1.5		Contact GAM		
2.0	42	25	47.8	38.2
3.0	63	30	57.8	57.3
4.0	84	40	67.8	76.4

Lubricator Pump

(125 ml Grease Pack)

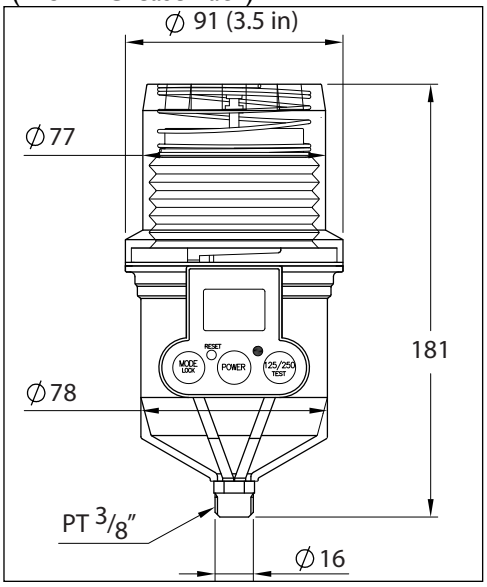

Lubricator Mounting Bracket

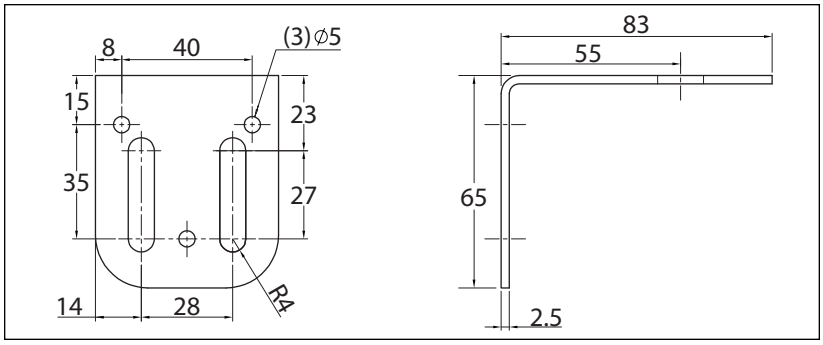

Lubrication Dispensing Period Setting

Proper lubrication amount is dependent on the module and linear speed of the rack and pinion system. These two factors are used to determine the dispensing period (interval) setting for the automatic lubricator.
For single point lubrication with the GAM PulsarLube Automatic Lubricator, find the dispensing period setting as follows:

1. Using **Table 1**, find the row corresponding to the **Module** of your rack
2. Read across to find the column corresponding to the **Linear Velocity** of your system
3. Use the value in the **Interval** column for the **Dispensing Period** setting on the lubricator

Notes:

- For reference, **Table 2** shows the actual amount dispensed for each dispensing period setting on the PulsarLube Automatic Lubricator.
- If you are using a different brand of lubricator, **Table 3** lists the recommended range of lubrication for the given module and linear speed.
- To lubricate multiple points with one lubricator, contact GAM for available options.
- Replacement grease packs are available from GAM:

Replacement 125 ml Grease Packs	MOBILUX EP2 (standard)	FM222 (food grade)
Part Number	44060001	44060002

Table 1: Dispensing Period (Interval) Setting for 125 ml Grease Pack *(Standard)*

Rack Module		Linear Velocity									
		0 – 1 m/s		1 – 2 m/s		2 – 3 m/s		3 – 4 m/s		4 – 5 m/s	
Over	Up to/Incl.	Interval	cm^3/24h	Interval	cm^3/24h	Interval	cm^3/24h	Interval	cm^3/24h	Interval	cm^3/24h
-	2	12	0.35	12	0.35	12	0.35	12	0.35	12	0.35
2	3	12	0.35	12	0.35	12	0.35	12	0.35	12	0.35
3	4	12	0.35	12	0.35	12	0.35	6	0.69	6	0.69
4	5	12	0.35	12	0.35	6	0.69	6	0.69	3	1.39
5	6	12	0.35	12	0.35	6	0.69	3	1.39	2	2.08

Table 2: Dispensed Amount for Each Dispensing Period Setting *(125 ml Grease Pack)*

Dispensing Period:	H	1	2	3	6	12
Days:	15	30	60	90	180	360
Dispensed (cm^3/24h):	8.33	4.17	2.08	1.39	0.69	0.35

Table 3: Recommended Lubrication Range *(cm^3/24 hours)*

Rack Module		Linear Velocity				
		0 – 1 m/s	1 – 2 m/s	2 – 3 m/s	3 – 4 m/s	4 – 5 m/s
Over	Up to/Incl.	cm^3/24h	cm^3/24h	cm^3/24h	cm^3/24h	cm^3/24h
-	2	0.10 – 0.23	0.12 – 0.23	0.14 – 0.35	0.19 – 0.69	0.21 – 0.69
2	3	0.14 – 0.23	0.18 – 0.35	0.22 – 0.69	0.29 – 0.69	0.34 – 0.69
3	4	0.21 – 0.23	0.23 – 0.69	0.33 – 0.69	0.44 – 1.39	0.54 – 1.39
4	5	0.23 – 0.30	0.23 – 0.69	0.50 – 0.69	0.67 – 1.39	0.85 – 1.39
5	6	0.23 – 0.43	0.35 – 0.69	0.69 – 1.39	1.04 – 2.08	1.35 – 2.40

Rack & Pinion Terminology

Module

The module is the relative size of the rack and pinion as described by the pinion. It is the ratio of the diameter of a gear to the number of teeth on the gear. The module and number of teeth give the reference pitch diameter:

$$\text{Module (M)} = \frac{\text{Pitch Diameter}}{\text{Number of Teeth (z)}}$$

$$\text{Reference Pitch Diameter} = \text{Module } (M) \times \text{Number of Teeth } (z)$$

***NOTE**: The rack and pinion must have the same module.*

ISO Quality Number

The ISO Quality Number describes the accuracy of the gear including the tooth alignment and profile, spacing variation and radial runout among other things. GAM stocks Q6 and Q10 racks along with Q6 pinions.

Gear Quality Number

ISO	DIN	AGMA	JIS
6	6	12	2
10	10	8	6

Tooth Thickness Tolerance

Tooth Thickness Tolerance is the relationship between tooth thickness and a measuring pin measurement.

- The tooth thickness of racks is usually measured via the pin measurement as tooth thickness can not be measured directly.
- A measuring pin is put into the teeth and measured to the back of the rack.

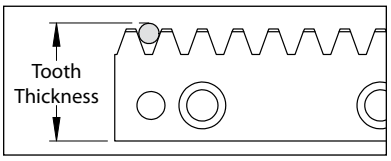

Pitch Error

Pitch: Distance between teeth as measured from a point on one rack tooth to the corresponding point on the next gear tooth.

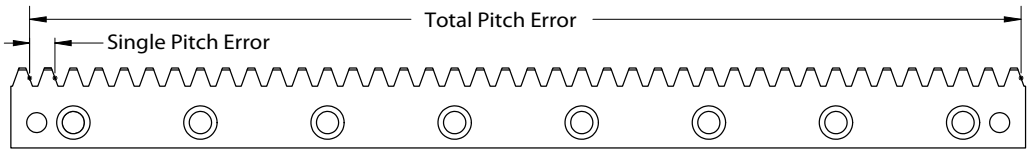

Single Pitch Error: Error in the pitch between two teeth relative to the ideal.

Total Pitch Error: Cumulative pitch error over the length of the rack.

Tolerance	Module 2.0		Module 3.0		Module 4.0	
	ISO 6	ISO 10	ISO 6	ISO 10	ISO 6	ISO 10
Tooth Thickness Tolerance (µm)	-20	-124	-10	-124	-20	-124
Single Pitch Error (µm)	≤ 8	≤ 37	≤ 9	≤ 39	≤ 10	≤ 43
Total Pitch Error (µm)	≤ 36	≤ 148	≤ 36	≤ 162	≤ 36	≤ 175

Rack & Pinion Terminology

Circular Pitch: The distance from a point on one gear tooth to the corresponding point on the next gear tooth, measured along the pitch circle.

Pitch Circle: A circle transcribing the contact point on the teeth where the rack and pinion mesh correctly

Pitch Diameter: The diameter of the gear's pitch circle.

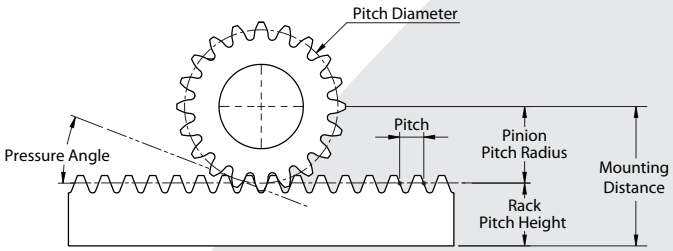

Pressure Angle: The angle made by the sides of the tooth as it angles towards the top of the tooth. Mating gears and racks must have the same pressure angle.

Mounting Distance: Distance between the center of the pinion and the bottom of the rack that ensures proper mesh. The Mounting distance should stay consistent for the length of the rack.

Mounting Distance = Pitch Height of Rack + Pitch Radius of Pinion

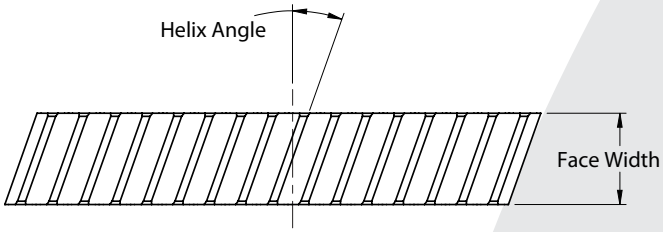

Helix Angle: Angle of the rack or gear tooth. GAM racks and pinions use a common helix angle of 19°31'42"

Gear Strength & Durability

Gear strength and durability depends on transmitted forces and power.

$$\text{Power } (P_{kW}) = \text{Force } (F_N) \times \text{Linear Velocity } (V_{mm/s})$$

$$\text{Force } (F_N) = \frac{1000 \times \text{Torque } (T_{Nm})}{\text{Pitch Radius } (r_{mm})}$$

$$\text{Linear Velocity } (V_{mm/s}) = \frac{\pi r_{mm} \times N_{RPM}}{60}$$

$$\text{Power } (P_{kW}) = \frac{T_{Nm} \times N_{RPM}}{9550}$$

The feed force required by the application should be less than the feed force capacity of the pinion or gearbox-pinion system as listed in this catalog. The feed force rating should be derated by the Overload Factor (Ka) and the Life Factor (KL)

$$\text{Application Feed Force } (F) < \frac{K_L}{K_a} \times \text{Rated Feed Force } (F)$$

Overload Factor (K_a)

Impact from Prime Mover	Impact from Load Side		
	Uniform Load	Medium Impact	Heavy Impact
Uniform Load	1	1.25	1.75
Light Impact	1.25	1.5	2
Medium Impact	1.5	1.75	2.25

Life Factor (K_L)

Number of Cycles	Hardness (HRC) ≥ 45
Under 10,000	1.5
~ 10^5	1.5
~ 10^6	1.1
~ 10^7	1.0